Instruction Manual– Underwater Lighting

Please read this manual before installation and keep it for future reference.

■ WARNING!

1. Don't connect these lights to the mains supply directly, and please use the specific proper driver with specific input voltage.
2. Please, disconnect the power before installation, repair or replacement.
3. Use the lights in the proper application places so to avoid the light or glasses to get broken.
4.Whatever the case is, the lamp is not to be insulated liner or similar materials cover.
5.Please only use or test this lighting fixture under the water application since the heating when LEDs working may damage the lights if without cooling by water !
6.Attention! Please connect the wiring port well with the cables to prevent leakage of electricity.
7. If any questions on this instruction, please consult a qualified technician.

■ INSTALLATION INSTRUCTIONS

Ensure main energy supply is turned off during the whole installation process.

1. Place the mounting sleeve in the desired position when constructing the wall of the pool and fix it with concrete.
   Please, also make the tube for the lighting fixture wires to be connected to the power cable from the specific driver

The height of wire connecting place is recommended to exceed the the surface of the water.

2.Use the IP68 waterproof connector to connect the cables of the fixture and the cables from the specific driver.
3.Fix the lamp body to the wall with provided screws.
Ensure everything is installed in a proper way and manner. Now, you can turn on the power supply.

■ PRODUCT SPECIFICATIONS

Item No.: SL-6005-1500-A
Input: DC12V-24V
IP rating: IP68
Class: III
Cut Out: /

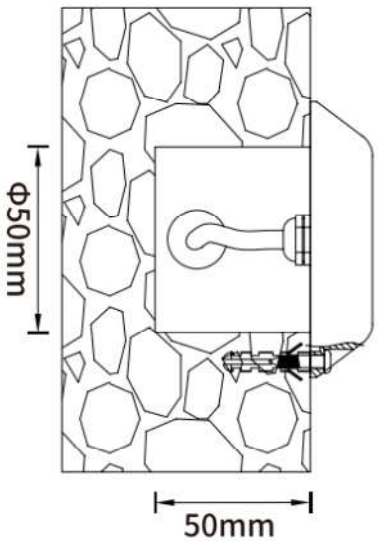

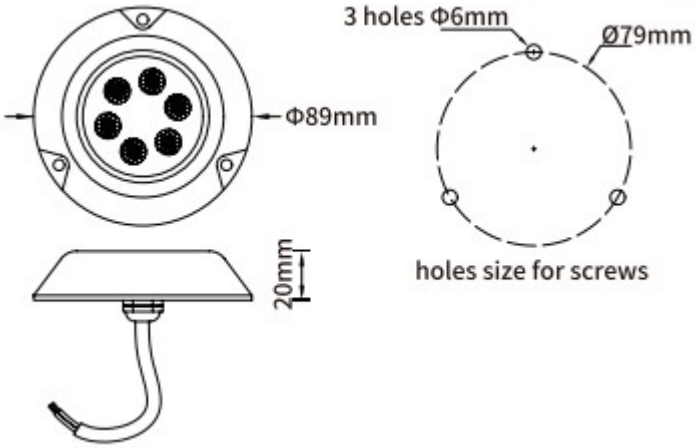

WARNING!

The non-qualified personnel cannot manipulate the fixture (Installation, repair, replacement, etc.).
We keep the right to refuse the repair or replacement of the fixtures when have been manipulated by non-qualified personnel.